TB-FMCH-VFMC-DP
Hardware User Manual

Rev. 1.00

Revision History

Version	Date	Description	Publisher
Rev. 0.01	2018/8/17		Kazu
Rev. 0.02	2018/8/29		Kazu
Rev. 0.03	2018/8/30		Kazu
Rev. 0.04	2018/9/04		Kazu
Rev. 0.05	2018/9/06		Kazu
Rev. 1.00	2018/12/6	Delete “Preliminary” Update Table 8-2 Add Note 9	Kazu

Table of Contents

1. Related Documents and Accessories 8
2. Overview 8
3. Feature 8
4. Block Diagram 9
5. External View of the Board 10
6. Board Specifications 11
7. Supplying Power to the Board 12
8. Connectors 12
   8.1. Displayport Connector 12
   8.2. FMC connector 12
   8.3. Tested pins on FMC connector 24
9. I2C bus 25
   9.1. I2C Syb-system 25
   9.2. I2C Slave addresses 27
   9.3. FMC I2C EEPROM 27

List of Figures

Figure 4-1 Block diagram for DP signal path 9
Figure 4-2 Block diagram for Clock sub-system 9
Figure 5-1 Board Top View 10
Figure 6-1 Board Dimensions 11
Figure 8-1 DisplayPort connector 12
Figure 8-2 High Pin Count FMC 13
Figure 9-1 I2C jumpers 25
Figure 9-2 I2C pinout setting A 26
Figure 9-3 I2C pinout setting B 26

List of Tables

Table 8-1 Pin assign (To carrier board) 14
Table 8-2 Tested pins of the FMC 24
Table 9-1 I2C pinout (setting A) 26
Table 9-2 I2C pinout (setting B) 26
Table 9-3 I2C slave address 27

Introduction

Thank you for purchasing the **TB-FMCH-VFMC-DP** board. Before using the product, be sure to carefully read this user manual and fully understand how to correctly use the product. First read through this manual, and always keep it handy.

SAFETY PRECAUTIONS

Be sure to follow these precautions

Observe the precautions listed below to prevent injuries to you or other personnel or damage to property.

- **Before using the product, read these safety precautions carefully to ensure proper use.**
- **These precautions contain serious safety instructions that must be followed.**
- **After reading through this manual, be sure to always keep it handy.**

The following conventions are used to indicate the possibility of injury/damage and classify precautions if the product is handled incorrectly.

Danger	Indicates the high possibility of serious injury or death if the product is handled incorrectly.
Warning	Indicates the possibility of serious injury or death if the product is handled incorrectly.
Caution	Indicates the possibility of injury or physical damage in connection with houses or household goods if the product is handled incorrectly.

The following graphical symbols are used to indicate and classify precautions in this manual.
(Examples)

	Turn off the power switch.
	Do not disassemble the product.
	Do not attempt this.

Warning	
	In the event of a failure, disconnect the power supply. If the product is used as is, a fire or electric shock may occur. Disconnect the power supply immediately and contact our sales personnel for repair.
	If an unpleasant smell or smoking occurs, disconnect the power supply. If the product is used as is, a fire or electric shock may occur. Disconnect the power supply immediately. After verifying that no smoking is observed, contact our sales personnel for repair.
	Do not disassemble, repair or modify the product. Otherwise, a fire or electric shock may occur due to a short circuit or heat generation. For inspection, modification or repair, contact our sales personnel.
	Do not place the product on unstable locations. Otherwise, it may drop or fall, resulting in injury to persons or failure.
	If the product is dropped or damaged, do not use it as is. Otherwise, a fire or electric shock may occur.
	Do not touch the product with a metallic object. Otherwise, a fire or electric shock may occur.
	Do not place the product in dusty or humid locations or where water may splash. Otherwise, a fire or electric shock may occur.
	Do not get the product wet or touch it with a wet hand. Otherwise, the product may break down or it may cause a fire, smoking or electric shock.
	Do not touch a connector on the product (gold-plated portion). Otherwise, the surface of a connector may be contaminated with sweat or skin oil, resulting in contact failure of a connector or it may cause a malfunction, fire or electric shock due to static electricity.

Caution	
	Do not use or place the product in the following locations. • Humid, high temperature over 85 degrees Fahrenheit and dusty locations • Airless locations such as closet or bookshelf • Locations which receive oily smoke or steam • Locations exposed to direct sunlight • Locations close to heating equipment • Closed inside of a car where the temperature becomes high • Staticky locations • Locations close to water or chemicals Otherwise, a fire, electric shock, accident or deformation may occur due to a short circuit or heat generation.
	Do not place heavy things on the product. Otherwise, the product may be damaged.

■ Disclaimer

This product is an evaluation board intended for development of video interface. Tokyo Electron Device Limited assumes no responsibility for any damages resulting from the use of this product for purposes other than those stated.

Even if the product is used properly, Tokyo Electron Device Limited assumes no responsibility for any damages caused by:

(1) Earthquake, thunder, natural disaster or fire resulting from the use beyond our responsibility, acts by a third party or other accidents, the customer's willful or accidental misuse or use under other abnormal conditions.
(2) Secondary impact arising from use of this product or its unusable state (business interruption or others)
(3) Use of this product against the instructions given in this manual.
(4) Malfunctions due to connection to other devices.

Tokyo Electron Device Limited assumes no responsibility or liability for:

(1) Erasure or corruption of data arising from use of this product.
(2) Any consequences or other abnormalities arising from use of this product, or
(3) Damage of this product not due to our responsibility or failure due to modification

This product has been developed by assuming its use for research, testing or evaluation. It is not authorized for use in any system or application that requires high reliability.

Repair of this product is carried out by replacing it on a chargeable basis, not repairing the faulty devices. However, non-chargeable replacement is offered for initial failure if such notification is received within two weeks after delivery of the product.

The specification of this product is subject to change without prior notice.

The product is subject to discontinuation without prior notice.

1. Related Documents and Accessories

Related documents:

The latest version of hardware user manual and other documents can be downloaded from Inrevium website. This board is used with Xilinx's DisplayPort 1.4 IP core. Documents for the IP core can be downloaded from Xilinx website.

Board accessories:

- 2mm Jumper: qty. 3 (installed onto the board)
- 2.54mm jumper : qty. 2

2. Overview

The TB-FMCH-VFMC-DP provides test environment for DisplayPort Standard Version1.4. It supports 4 Lane of 1.62Gbps, 2.7Gbps 5.4Gbps and 8.1Gbps. It uses MegaChips MCDP6000 for sink(RX) and SN65DP141 for source(TX). Also, it can be customized for two sinks or two sources. The customization is done by Inrevium design service.

Note 1: This board is used with Xilinx's DisplayPort 1.4 IP core. Some functions of the board are not tested because IP does not support them. The functions have not been tested are not coverd by the warranty and no technical support is provided. Tested signals are described on the Table 8-2. Inrevium has no plan to test it in the future. Questions for IP core and reference design, please contact to Xilinx (www.xilinx.com) .

Note 2: DisplayPort redriver SN65DP141 officially supports DisplayPort 1.3.

Note 3: This board has been tested with Xilinx KCU105 and ZCU102. Conpatibility with other boards are not guaranteed.

Note 4: This board consists Video FMC base and detachable Tx and Rx dongles, but please do not disassemble these boards. If it is disassembled manufacture's warranty will be voided.

Note 5: Length of standoffs come with the board are adjusted for Xilinx KCU105 board.

Note 6: Voltage levels for unused pins of FMC have to be fixed properly by users.

Note 7: If you connect/disconnect the board, please turn off the power of the carrier board and wait 10 second to avoid permanent damage caused by charged electricity.

Note 8: The board specification itself and Information in the technical documents are subject to change without notice.

Note 9: Certificate of Compliance to RoHS can not be issued.

3. Feature

DisplayPort Driver IC: Texas Instruments, SN65DP141RLJR

DisplayPort Redriver IC: Megachips, MCDP6000B0

PLLIC: IDT, IDT8T49N241-999NLGI

DisplayPort connector: Molex, 47272-0001

FMC connector: Samtec, ASP-134488-01

4. Block Diagram

Block diagram for DisplayPort signal path and clock sub-system are shown in Figure 4-1 and Figure 4-2.

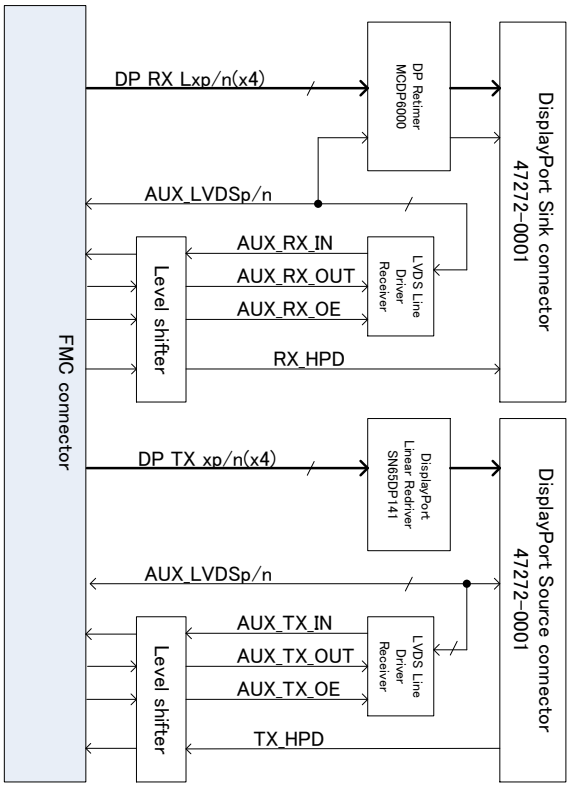

Figure 4-1 Block diagram for DP signal path

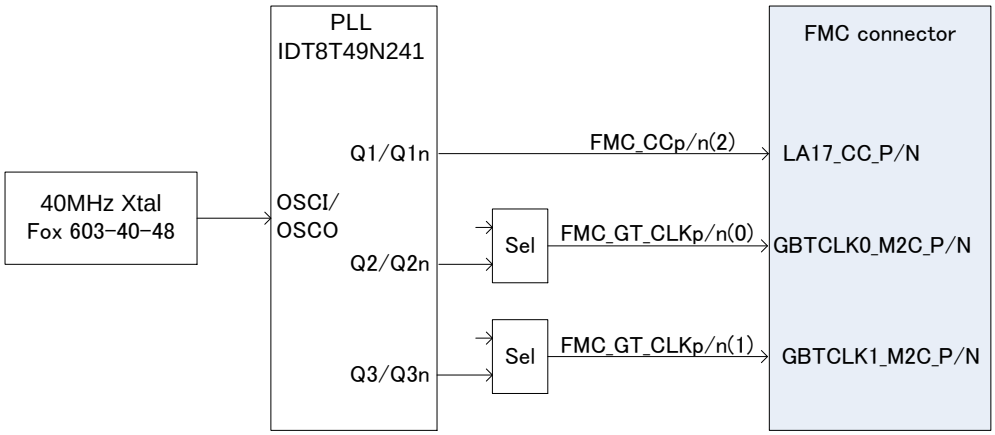

Figure 4-2 Block diagram for Clock sub-system

5. External View of the Board

The board's components are shown on the top side view in Figure 5-1

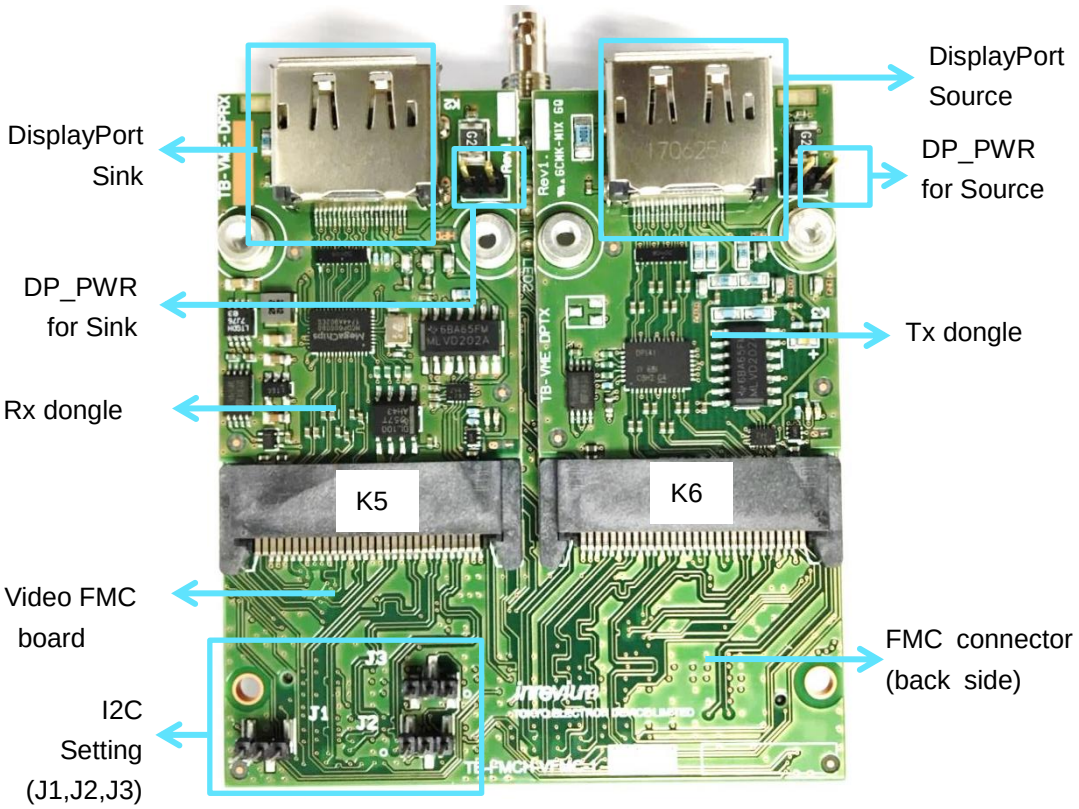

Figure 5-1 Board Top View

6. Board Specifications

Figure 6-1 shows the board Dimensions.

Dimensions : 76.50mm x 89.00mm (excluding the protuberance)
Number of layers (Video FMC board) : 6-layer
Thickness (Video FMC board) :1.7mm :
Number of layers (Tx and Rx dongle) : 4-layer
Thickness (Tx and Rx dongle) :1.6mm
Material :Panasonic R-1755S

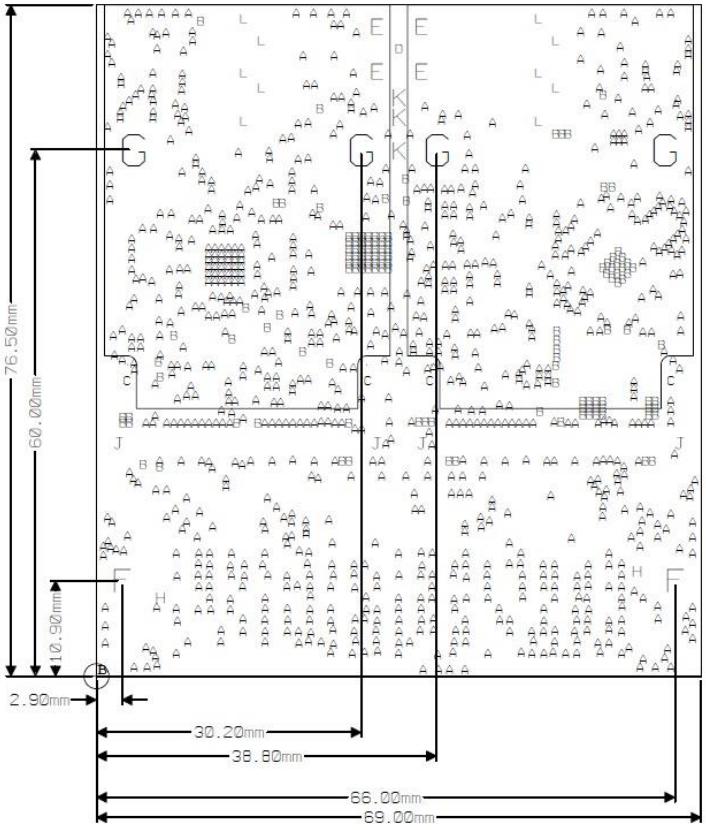

Figure 6-1 Board Dimensions

7. Supplying Power to the Board

3.3V and VADJ=1.8V have to be provided to this board. The carrier card 12 volts rail is not used.

8. Connectors

8.1. Displayport Connector

DisplayPort Sink and Source connectors are populated on the top side of the board.

3.3 volts DP_PWR can be supplied by putting 2.54mm jumper onto the jumper pin located next to the connector.

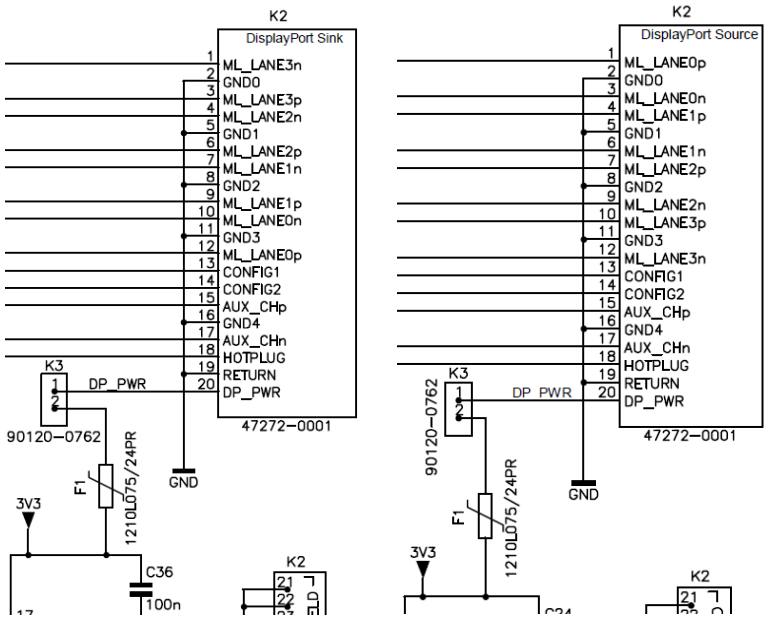

Figure 8-1 DisplayPort connector

8.2. FMC connector

This board has one HPC 400 pin FMC connectoron board as shown on the block diagram. These FMC connectors follow the VITA 57.1 standard with Samtec ASP-134486-01 connectors.

Presented below is the standard pin assignment on FMC HPC connectors.

Not all the pins are connected on the FMC connectors. Please follow this section for more details on all the FMC pinouts.

	K	J	H	G	F	E	D	C	B	A
1	VREF_B_M2C	GND	VREF_A_M2C	GND	PG_M2C	GND	PG_C2M	GND	CLK_DIR	GND
2	GND	CLK3_BIDIR_P	PRSNT_M2C_L	CLK1_M2C_P	GND	HA01_P_CC	GND	DP0_C2M_P	GND	DP1_M2C_P
3	GND	CLK3_BIDIR_N	GND	CLK1_M2C_N	GND	HA01_N_CC	GND	DP0_C2M_N	GND	DP1_M2C_N
4	CLK2_BIDIR_P	GND	CLK0_M2C_P	GND	HA00_P_CC	GND	GBTCLK0_M2C_P	GND	DP9_M2C_P	GND
5	CLK2_BIDIR_N	GND	CLK0_M2C_N	GND	HA00_N_CC	GND	GBTCLK0_M2C_N	GND	DP9_M2C_N	GND
6	GND	HA03_P	GND	LA00_P_CC	GND	HA05_P	GND	DP0_M2C_P	GND	DP2_M2C_P
7	HA02_P	HA03_N	LA02_P	LA00_N_CC	HA04_P	HA05_N	GND	DP0_M2C_N	GND	DP2_M2C_N
8	HA02_N	GND	LA02_N	GND	HA04_N	GND	LA01_P_CC	GND	DP8_M2C_P	GND
9	GND	HA07_P	GND	LA03_P	GND	HA09_P	LA01_N_CC	GND	DP8_M2C_N	GND
10	HA06_P	HA07_N	LA04_P	LA03_N	HA08_P	HA09_N	GND	LA06_P	GND	DP3_M2C_P
11	HA06_N	GND	LA04_N	GND	HA08_N	GND	LA05_P	LA06_N	GND	DP3_M2C_N
12	GND	HA11_P	GND	LA08_P	GND	HA13_P	LA05_N	GND	DP7_M2C_P	GND
13	HA10_P	HA11_N	LA07_P	LA08_N	HA12_P	HA13_N	GND	GND	DP7_M2C_N	GND
14	HA10_N	GND	LA07_N	GND	HA12_N	GND	LA09_P	LA10_P	GND	DP4_M2C_P
15	GND	HA14_P	GND	LA12_P	GND	HA16_P	LA09_N	LA10_N	GND	DP4_M2C_N
16	HA17_P_CC	HA14_N	LA11_P	LA12_N	HA15_P	HA16_N	GND	GND	DP6_M2C_P	GND
17	HA17_N_CC	GND	LA11_N	GND	HA15_N	GND	LA13_P	GND	DP6_M2C_N	GND
18	GND	HA18_P	GND	LA16_P	GND	HA20_P	LA13_N	LA14_P	GND	DP5_M2C_P
19	HA21_P	HA18_N	LA15_P	LA16_N	HA19_P	HA20_N	GND	LA14_N	GND	DP5_M2C_N
20	HA21_N	GND	LA15_N	GND	HA19_N	GND	LA17_P_CC	GND	GBTCLK1_M2C_P	GND
21	GND	HA22_P	GND	LA20_P	GND	HB03_P	LA17_N_CC	GND	GBTCLK1_M2C_N	GND
22	HA23_P	HA22_N	LA19_P	LA20_N	HB02_P	HB03_N	GND	LA18_P_CC	GND	DP1_C2M_P
23	HA23_N	GND	LA19_N	GND	HB02_N	GND	LA23_P	LA18_N_CC	GND	DP1_C2M_N
24	GND	HB01_P	GND	LA22_P	GND	HB05_P	LA23_N	GND	DP9_C2M_P	GND
25	HB00_P_CC	HB01_N	LA21_P	LA22_N	HB04_P	HB05_N	GND	GND	DP9_C2M_N	GND
26	HB00_N_CC	GND	LA21_N	GND	HB04_N	GND	LA26_P	LA27_P	GND	DP2_C2M_P
27	GND	HB07_P	GND	LA25_P	GND	HB09_P	LA26_N	LA27_N	GND	DP2_C2M_N
28	HB06_P_CC	HB07_N	LA24_P	LA25_N	HB08_P	HB09_N	GND	GND	DP8_C2M_P	GND
29	HB06_N_CC	GND	LA24_N	GND	HB08_N	GND	TCK	GND	DP8_C2M_N	GND
30	GND	HB11_P	GND	LA29_P	GND	HB13_P	TDI	SCL	GND	DP3_C2M_P
31	HB10_P	HB11_N	LA28_P	LA29_N	HB12_P	HB13_N	TDO	SDA	GND	DP3_C2M_N
32	HB10_N	GND	LA28_N	GND	HB12_N	GND	3P3VAUX	GND	DP7_C2M_P	GND
33	GND	HB15_P	GND	LA31_P	GND	HB19_P	TMS	GND	DP7_C2M_N	GND
34	HB14_P	HB15_N	LA30_P	LA31_N	HB16_P	HB19_N	TRST_L	GA0	GND	DP4_C2M_P
35	HB14_N	GND	LA30_N	GND	HB16_N	GND	GA1	12P0V	GND	DP4_C2M_N
36	GND	HB18_P	GND	LA33_P	GND	HB21_P	3P3V	GND	DP6_C2M_P	GND
37	HB17_P_CC	HB18_N	LA32_P	LA33_N	HB20_P	HB21_N	GND	12P0V	DP6_C2M_N	GND
38	HB17_N_CC	GND	LA32_N	GND	HB20_N	GND	3P3V	GND	GND	DP5_C2M_P
39	GND	VIO_B_M2C	GND	VADJ	GND	VADJ	GND	3P3V	GND	DP5_C2M_N
40	VIO_B_M2C	GND	VADJ	GND	VADJ	GND	3P3V	GND	RES0	GND
			LPC Connector	LPC Connector			LPC Connector	LPC Connector		

Figure 8-2 High Pin Count FMC

Table 8-1 Pin assign (To carrier board)

A row in HPC pin assignment				
#	FMC signal	I/O	Signal name	Note
1	GND	-	GND	
2	DP1_M2C_P	O	GT_M2Cp(1)	SINK MainLink LANE1 (Positive)
3	DP1_M2C_N	O	GT_M2Cn(1)	SINK MainLink LANE1 (Negative)
4	GND	-	GND	
5	GND	-	GND	
6	DP2_M2C_P	O	GT_M2Cp(2)	SINK MainLink LANE2 (Positive)
7	DP2_M2C_N	O	GT_M2Cn(2)	SINK MainLink LANE2 (Negative)
8	GND	-	GND	
9	GND	-	GND	
10	DP3_M2C_P	O	GT_M2Cp(3)	SINK MainLink LANE3 (Positive)
11	DP3_M2C_N	O	GT_M2Cn(3)	SINK MainLink LANE3 (Negative)
12	GND	-	GND	
13	GND	-	GND	
14	DP4_M2C_P	-	GT_M2Cp(4)	GND
15	DP4_M2C_N	-	GT_M2Cn(4)	GND
16	GND	-	GND	
17	GND	-	GND	
18	DP5_M2C_P	-	GT_M2Cp(5)	GND
19	DP5_M2C_N	-	GT_M2Cn(5)	GND
20	GND	-	GND	
21	GND	-	GND	
22	DP1_C2M_P	I	GT_C2Mp(1)	SOURCE MainLink LANE1 (Positive)
23	DP1_C2M_N	I	GT_C2Mn(1)	SOURCE MainLink LANE1 (Negative)
24	GND	-	GND	
25	GND	-	GND	
26	DP2_C2M_P	I	GT_C2Mp(2)	SOURCE MainLink LANE2 (Positive)
27	DP2_C2M_N	I	GT_C2Mn(2)	SOURCE MainLink LANE2 (Negative)
28	GND	-	GND	
29	GND	-	GND	
30	DP3_C2M_P	I	GT_C2Mp(3)	SOURCE MainLink LANE3 (Positive)
31	DP3_C2M_N	I	GT_C2Mn(3)	SOURCE MainLink LANE3 (Negative)
32	GND	-	GND	
33	GND	-	GND	
34	DP4_C2M_P	-	GT_C2Mp(4)	N.C
35	DP4_C2M_N	-	GT_C2Mn(4)	N.C
36	GND	-	GND	
37	GND	-	GND	
38	DP5_C2M_P	-	GT_C2Mp(5)	N.C
39	DP5_C2M_N	-	GT_C2Mn(5)	N.C
40	GND	-	GND	

B row in HPC pin assignment				
#	FMC signal	I/O	Signal name	Note
1	CLK_DIR	-	-	N.C
2	GND	-	GND	
3	GND	-	GND	
4	DP9_M2C_P	-	-	N.C
5	DP9_M2C_N	-	-	N.C
6	GND	-	GND	
7	GND	-	GND	
8	DP8_M2C_P	-	-	N.C
9	DP8_M2C_N	-	-	N.C
10	GND	-	GND	
11	GND	-	GND	
12	DP7_M2C_P	-	GT_M2Cp(7)	GND
13	DP7_M2C_N	-	GT_M2Cn(7)	GND
14	GND	-	GND	
15	GND	-	GND	
16	DP6_M2C_P	-	GT_M2Cp(6)	GND
17	DP6_M2C_N	-	GT_M2Cn(6)	GND
18	GND	-	GND	
19	GND	-	GND	
20	GBTCLK1_M2C_P	O	FMC_GT_CLKp(1)	LMK03318 CK_OUT5p or IDT8T49N241 Q3
21	GBTCLK1_M2C_N	O	FMC_GT_CLKn(1)	LMK03318 CK_OUT5n or IDT8T49N241 Q3n
22	GND	-	GND	
23	GND	-	GND	
24	DP9_C2M_P	-	-	N.C
25	DP9_C2M_N	-	-	N.C
26	GND	-	GND	
27	GND	-	GND	
28	DP8_C2M_P	-	-	N.C
29	DP8_C2M_N	-	-	N.C
30	GND	-	GND	
31	GND	-	GND	
32	DP7_C2M_P	-	GT_C2Mp(7)	N.C
33	DP7_C2M_N	-	GT_C2Mn(7)	N.C
34	GND	-	GND	
35	GND	-	GND	
36	DP6_C2M_P	-	GT_C2Mp(6)	N.C
37	DP6_C2M_N	-	GT_C2Mn(6)	N.C
38	GND	-	GND	
39	GND	-	GND	
40	RES0	-	-	N.C

C row in HPC pin assignment				
#	FMC signal	I/O	Signal name	Note
1	GND	-	GND	
2	DP0_C2M_P	I	GT_C2Mp(0)	SOURCE MainLink LANE0 (Positive)
3	DP0_C2M_N	I	GT_C2Mn(0)	SOURCE MainLink LANE0 (Negative)
4	GND	-	GND	
5	GND	-	GND	
6	DP0_M2C_P	O	GT_M2Cp(0)	SINK MainLink LANE0 (Positive)
7	DP0_M2C_N	O	GT_M2Cn(0)	SINK MainLink LANE0 (Negative)
8	GND	-	GND	
9	GND	-	GND	
10	LA06_P	O	FMC_MZ1_IOp(4)	SOURCE AUX IN(single-ended)
11	LA06_N	-	FMC_MZ1_IOn(4)	N.C
12	GND	-	GND	
13	GND	-	GND	
14	LA10_P	I	FMC_MZ1_IOp(6)	SN65DP141 PWDn
15	LA10_N	I	FMC_MZ1_IOn(6)	SOURCE AUX OUT(single-ended)
16	GND	-	GND	
17	GND	-	GND	
18	LA14_P	I	FMC_MZ1_IOp(1)	TX board LED1
19	LA14_N	I	FMC_MZ1_IOn(1)	TX board LED0
20	GND	-	GND	
21	GND	-	GND	
22	LA18_P_CC	O	FMC_CCp(5)	Si5344D CK_OUT3p
23	LA18_N_CC	O	FMC_CCn(5)	Si5344D CK_OUT3n
24	GND	-	GND	
25	GND	-	GND	
26	LA27_P	O	FMC_LOLn	Si5344D LOLn
27	LA27_N	I/O	FMC_STATUS(1)	LMK03318 STATUS1
28	GND	-	GND	
29	GND	-	GND	
30	SCL	I	FMC_SCL	I2C SCL (if selected)
31	SDA	I/O	FMC_SDA	I2C SDA (if selected)
32	GND	-	GND	
33	GND	-	GND	
34	GA0	I	FMC_GA0	FMC I2C EEPROM Address 1
35	12P0V	-	12V	
36	GND	-	GND	
37	12P0V	-	12V	
38	GND	-	GND	
39	3P3V	-	3V3_FMC	
40	GND	-	GND	

D row in HPC pin assignment				
#	FMC signal	I/O	Signal name	Note
1	PG_C2M	-	-	N.C
2	GND	-	GND	
3	GND	-	GND	
4	GBTCLK0_M2C_P	O	FMC_GT_CLKp(0)	LMK03318 CK_OUT4p or IDT8T49N241 Q2
5	GBTCLK0_M2C_N	O	FMC_GT_CLKn(0)	LMK03318 CK_OUT4n or IDT8T49N241 Q2n
6	GND	-	GND	
7	GND	-	GND	
8	LA01_P_CC	O	FMC_CCp(4)	Si5344D CK_OUT2p
9	LA01_N_CC	O	FMC_CCn(4)	Si5344D CK_OUT2n
10	GND	-	GND	
11	LA05_P	I	FMC_DAC_MCLK	Audio DAC MCLK
12	LA05_N	I	FMC_DAC_SDIN	Audio DAC SDIN
13	GND	-	GND	
14	LA09_P	I	FMC_DAC_LRCK	Audio DAC LRCK
15	LA09_N	I	FMC_DAC_SCLK	Audio DAC SCLK
16	GND	-	GND	
17	LA13_P	I/O	FMC_MZ1_IOp(3)	SOURCE AUX Positive
18	LA13_N	I/O	FMC_MZ1_IOn(3)	SOURCE AUX Negative
19	GND	-	GND	
20	LA17_P_CC	O	FMC_CCp(2)	IDT8T49N241 Q1
21	LA17_N_CC	O	FMC_CCn(2)	IDT8T49N241 Q1n
22	GND	-	GND	
23	LA23_P	I/O	FMC_STATUS(0)	LMK03318 STATUS0
24	LA23_N	I/O	FMC_IDT_GPIO3	IDT8T49N241 GPIO3
25	GND	-	GND	
26	LA26_P	O	FMC_ADC_SDOUT	Audio ADC SDOUT
27	LA26_N	I	FMC_ADC_MCLK	Audio ADC MCLK
28	GND	-	GND	
29	TCK	-	-	N.C
30	TDI	I	-	Connected to TDO
31	TDO	O	-	Connected to TDI
32	3P3VAUX	-	-	N.C
33	TMS	-	-	N.C
34	TRST_L	-	-	N.C
35	GA1	I	FMC_GA1	FMC I2C EEPROM Address 0
36	3P3V	-	3V3_FMC	
37	GND	-	GND	
38	3P3V	-	3V3_FMC	
39	GND	-	GND	
40	3P3V	-	3V3_FMC	

E row in HPC pin assignment				
#	FMC signal	I/O	Signal name	Note
1	GND	-	GND	
2	HA01_P_CC	-	-	N.C
3	HA01_N_CC	-	-	N.C
4	GND	-	GND	
5	GND	-	GND	
6	HA05_P	-	-	N.C
7	HA05_N	-	-	N.C
8	GND	-	GND	
9	HA09_P	-	-	N.C
10	HA09_N	-	-	N.C
11	GND	-	GND	
12	HA13_P	-	-	N.C
13	HA13_N	-	-	N.C
14	GND	-	GND	
15	HA16_P	-	-	N.C
16	HA16_N	-	-	N.C
17	GND	-	GND	
18	HA20_P	-	-	N.C
19	HA20_N	-	-	N.C
20	GND	-	GND	
21	HB03_P	-	-	N.C
22	HB03_N	-	-	N.C
23	GND	-	GND	
24	HB05_P	-	-	N.C
25	HB05_N	-	-	N.C
26	GND	-	GND	
27	HB09_P	-	-	N.C
28	HB09_N	-	-	N.C
29	GND	-	GND	
30	HB13_P	-	-	N.C
31	HB13_N	-	-	N.C
32	GND	-	GND	
33	HB19_P	-	-	N.C
34	HB19_N	-	-	N.C
35	GND	-	GND	
36	HB21_P	-	-	N.C
37	HB21_N	-	-	N.C
38	GND	-	GND	
39	VADJ	-	Vadj	VADJ Power
40	GND	-	GND	

F row in HPC pin assignment				
#	FMC signal	I/O	Signal name	Note
1	PG_M2C	-	-	N.C
2	GND	-	GND	
3	GND	-	GND	
4	HA00_P_CC	-	-	N.C
5	HA00_N_CC	-	-	N.C
6	GND	-	GND	
7	HA04_P	-	-	N.C
8	HA04_N	-	-	N.C
9	GND	-	GND	
10	HA08_P	-	-	N.C
11	HA08_N	-	-	N.C
12	GND	-	GND	
13	HA12_P	-	-	N.C
14	HA12_N	-	-	N.C
15	GND	-	GND	
16	HA15_P	-	-	N.C
17	HA15_N	-	-	N.C
18	GND	-	GND	
19	HA19_P	-	-	N.C
20	HA19_N	-	-	N.C
21	GND	-	GND	
22	HB02_P	-	-	N.C
23	HB02_N	-	-	N.C
24	GND	-	GND	
25	HB04_P	-	-	N.C
26	HB04_N	-	-	N.C
27	GND	-	GND	
28	HB08_P	-	-	N.C
29	HB08_N	-	-	N.C
30	GND	-	GND	
31	HB12_P	-	-	N.C
32	HB12_N	-	-	N.C
33	GND	-	GND	
34	HB16_P	-	-	N.C
35	HB16_N	-	-	N.C
36	GND	-	GND	
37	HB20_P	-	-	N.C
38	HB20_N	-	-	N.C
39	GND	-	GND	
40	VADJ	-	Vadj	VADJ Power

G row in HPC pin assignment				
#	FMC signal	I/O	Signal name	Note
1	GND	-	GND	
2	CLK1_M2C_P	O	FMC_CCp(0)	LMK03318 CK_OUT2p
3	CLK1_M2C_N	O	FMC_CCn(0)	LMK03318 CK_OUT2n
4	GND	-	GND	
5	GND	-	GND	
6	LA00_P_CC	O	FMC_CCp(3)	IDT8T49N241 Q0
7	LA00_N_CC	O	FMC_CCn(3)	IDT8T49N241 Q0n
8	GND	-	GND	
9	LA03_P	-	FMC_MZ1_IOp(2)	N.C
10	LA03_N	-	FMC_MZ1_IOn(2)	N.C
11	GND	-	GND	
12	LA08_P	I	FMC_CLKOUT(1)p	LMK03318 PRIREFp (if selected)
13	LA08_N	I	FMC_CLKOUT(1)n	LMK03318 PRIREFn (if selected)
14	GND	-	GND	
15	LA12_P	-	FMC_MZ1_IOp(7)	N.C
16	LA12_N	-	FMC_MZ1_IOn(7)	N.C
17	GND	-	GND	
18	LA16_P	I	FMC_CLKOUT(0)p	Si5344D CK_IN0p
19	LA16_N	I	FMC_CLKOUT(0)n	Si5344D CK_IN0n
20	GND	-	GND	
21	LA20_P	-	FMC_INTn(0)	N.C
22	LA20_N	-	FMC_INTn(1)	N.C
23	GND	-	GND	
24	LA22_P	I	FMC_ADC_SCLK	Audio ADC SCLK
25	LA22_N	I	FMC_ADC_LRCK	Audio ADC LRCK
26	GND	-	GND	
27	LA25_P	I	FMC_MZ0_IOp(0)	SINK AUX OUT (single-ended)
28	LA25_N	O	FMC_MZ0_IOn(0)	SINK AUX IN (single-ended)
29	GND	-	GND	
30	LA29_P	-	FMC_MZ0_IOp(4)	N.C
31	LA29_N	-	FMC_MZ0_IOn(4)	N.C
32	GND	-	GND	
33	LA31_P	-	FMC_MZ0_IOp(5)	N.C
34	LA31_N	-	FMC_MZ0_IOn(5)	N.C
35	GND	-	GND	
36	LA33_P	I	LED_0	Video FMC LED0
37	LA33_N	I	LED_1	Video FMC LED1
38	GND	-	GND	
39	VADJ	-	Vadj	
40	GND	-	GND	

H row in HPC pin assignment				
#	FMC signal	I/O	Signal name	note
1	VREF_A_M2C	-		N.C
2	PRSNT_M2C_L	-	GND	
3	GND	-	GND	
4	CLK0_M2C_P	O	FMC_CCp(1)	LMK03318 CK_OUT3p
5	CLK0_M2C_N	O	FMC_CCn(1)	LMK03318 CK_OUT3n
6	GND	-	GND	
7	LA02_P		FMC_MZ1_IOp(0)	N.C
8	LA02_N		FMC_MZ1_IOn(0)	N.C
9	GND	-	GND	
10	LA04_P	O	FMC_MZ1_IOp(5)	SOURCE HPD
11	LA04_N	I	FMC_MZ1_IOn(5)	SOURCE AUX OE
12	GND	-	GND	
13	LA07_P	O	FMC_ASYNC_VS	Sync Separator Vsync out
14	LA07_N	O	FMC_ASYNC_HS	Sync Separator Hsync out
15	GND	-	GND	
16	LA11_P	I	FMC_CLKOUT(2)p	LMK03318 SECREFp (if selected)
17	LA11_N	I	FMC_CLKOUT(2)n	LMK03318 SECREFn (if selected)
18	GND	-	GND	
19	LA15_P	O	FMC_ASYNC_FS	Sync Separator OE out
20	LA15_N	-	-	N.C
21	GND	-	GND	
22	LA19_P	I	FMC_CLKOUT(3)p	LMK03318 SECREFp (if selected)
23	LA19_N	I	FMC_CLKOUT(3)n	LMK03318 SECREFn (if selected)
24	GND	-	GND	
25	LA21_P	I	FMC_MZ0_IOp(1)	TX board LED1
26	LA21_N	I	FMC_MZ0_IOn(1)	TX board LED0
27	GND	-	GND	
28	LA24_P	I	FMC_MZ0_IOp(2)	SINK HPD
29	LA24_N	I	FMC_MZ0_IOn(2)	SINK AUX OE
30	GND	-	GND	
31	LA28_P	I/O	FMC_MZ0_IOp(3)	SINK AUX (LVDS)
32	LA28_N	I/O	FMC_MZ0_IOn(3)	SINK AUX (LVDS)
33	GND	-	GND	
34	LA30_P	-	FMC_MZ0_IOp(6)	N.C
35	LA30_N	-	FMC_MZ0_IOn(6)	N.C
36	GND	-	GND	
37	LA32_P	I	FMC_MZ0_IOp(7)	I2C SCL (if selected)
38	LA32_N	I/O	FMC_MZ0_IOn(7)	I2C SDA (if selected)
39	GND	-	GND	
40	VADJ	-	Vadj	VADJ Power

J row in HPC pin assignment				
#	FMC signal	I/O	Signal name	note
1	GND	-	GND	
2	CLK3_M2C_P	-	-	N.C
3	CLK3_M2C_N	-	-	N.C
4	GND	-	GND	
5	GND	-	GND	
6	HA03_P	-	-	N.C
7	HA03_N	-	-	N.C
8	GND	-	GND	
9	HA07_P	-	-	N.C
10	HA07_N	-	-	N.C
11	GND	-	GND	
12	HA11_P	-	-	N.C
13	HA11_N	-	-	N.C
14	GND	-	GND	
15	HA14_P	-	-	N.C
16	HA14_N	-	-	N.C
17	GND	-	GND	
18	HA18_P	-	-	N.C
19	HA18_N	-	-	N.C
20	GND	-	GND	
21	HA22_P	-	-	N.C
22	HA22_N	-	-	N.C
23	GND	-	GND	
24	HB01_P	-	-	N.C
25	HB01_N	-	-	N.C
26	GND	-	GND	
27	HB07_P	-	-	N.C
28	HB07_N	-	-	N.C
29	GND	-	GND	
30	HB11_P	-	-	N.C
31	HB11_N	-	-	N.C
32	GND	-	GND	
33	HB15_P	-	-	N.C
34	HB15_N	-	-	N.C
35	GND	-	GND	
36	HB18_P	-	-	N.C
37	HB18_N	-	-	N.C
38	GND	-	GND	
39	VIO_B_M2C	-	-	N.C
40	GND	-	GND	

K row in HPC pin assignment				
#	FMC signal	I/O	Signal name	note
1	VREF_B_M2C	-	-	N.C
2	GND	-	GND	
3	GND	-	GND	
4	CLK2_M2C_P	-	-	N.C
5	CLK2_M2C_N	-	-	N.C
6	GND	-	GND	
7	HA02_P	-	-	N.C
8	HA02_N	-	-	N.C
9	GND	-	GND	
10	HA06_P	-	-	N.C
11	HA06_N	-	-	N.C
12	GND	-	GND	
13	HA10_P	-	-	N.C
14	HA10_N	-	-	N.C
15	GND	-	GND	
16	HA17_P_CC	-	-	N.C
17	HA17_N_CC	-	-	N.C
18	GND	-	GND	
19	HA21_P	-	-	N.C
20	HA21_N	-	-	N.C
21	GND	-	GND	
22	HA23_P	-	-	N.C
23	HA23_N	-	-	N.C
24	GND	-	GND	
25	HB00_P_CC	-	-	N.C
26	HB00_N_CC	-	-	N.C
27	GND	-	GND	
28	HB06_P_CC	-	-	N.C
29	HB06_N_CC	-	-	N.C
30	GND	-	GND	
31	HB10_P	-	-	N.C
32	HB10_N	-	-	N.C
33	GND	-	GND	
34	HB14_P	-	-	N.C
35	HB14_N	-	-	N.C
36	GND	-	GND	
37	HB17_P_CC	-	-	N.C
38	HB17_N_CC	-	-	N.C
39	GND	-	GND	
40	VIO_B_M2C	-	-	N.C

8.3. Tested pins on FMC connector

The pins listed in **Table 8-2** are tested by using Xilinx DP1.4 IP. The other pins and funcstions that are related to the other pins (e.g. Audio DAC, ADC, Sync separator and PLLs) are not tested and are not guaranteed.

Table 8-2 Tested pins of the FMC

Row	#	FMC signal	I/O	Signal Name
A	2	DP1_M2C_P	O	GT_M2Cp(1)
	3	DP1_M2C_N	O	GT_M2Cn(1)
	6	DP2_M2C_P	O	GT_M2Cp(2)
	7	DP2_M2C_N	O	GT_M2Cn(2)
	10	DP3_M2C_P	O	GT_M2Cp(3)
	11	DP3_M2C_N	O	GT_M2Cn(3)
	22	DP1_C2M_P	I	GT_C2Mp(1)
	23	DP1_C2M_N	I	GT_C2Mn(1)
	26	DP2_C2M_P	I	GT_C2Mp(2)
	27	DP2_C2M_N	I	GT_C2Mn(2)
	30	DP3_C2M_P	I	GT_C2Mp(3)
	31	DP3_C2M_N	I	GT_C2Mn(3)
B	20	GBTCLK1_M2C_P	O	FMC_GT_CLKp(1)
	21	GBTCLK1_M2C_N	O	FMC_GT_CLKn(1)
C	2	DP0_C2M_P	I	GT_C2Mp(0)
	3	DP0_C2M_N	I	GT_C2Mn(0)
	6	DP0_M2C_P	O	GT_M2Cp(0)
	7	DP0_M2C_N	O	GT_M2Cn(0)
	10	LA06_P	O	FMC_MZ1_IOp(4)
	~~14~~	~~LA10_P~~	~~I~~	~~FMC_MZ1_IOp(6)~~
	15	LA10_N	I	FMC_MZ1_ION(6)
D	4	GBTCLK0_M2C_P	O	FMC_GT_CLKp(0)
	5	GBTCLK0_M2C_N	O	FMC_GT_CLKn(0)
	~~20~~	~~LA17_P_CC~~	~~O~~	~~FMC_CCp(2)~~
	~~21~~	~~LA17_N_CC~~	~~O~~	~~FMC_CCn(2)~~
G	27	LA25_P	I	FMC_MZ0_IOp(0)
	28	LA25_N	O	FMC_MZ0_ION(0)
H	10	LA04_P	O	FMC_MZ1_IOp(5)
	11	LA04_N	I	FMC_MZ1_ION(5)
	28	LA24_P	I	FMC_MZ0_IOp(2)
	29	LA24_N	I	FMC_MZ0_ION(2)

9. I2C bus

9.1. I2C Syb-system

The FMC card contains several I2C programmable devices. These devices can be mastered by either dedicated I2C pin of the FMC or IO pin of the FMC. Pinout can be selected by the three jumpers which are J1, J2 and J3

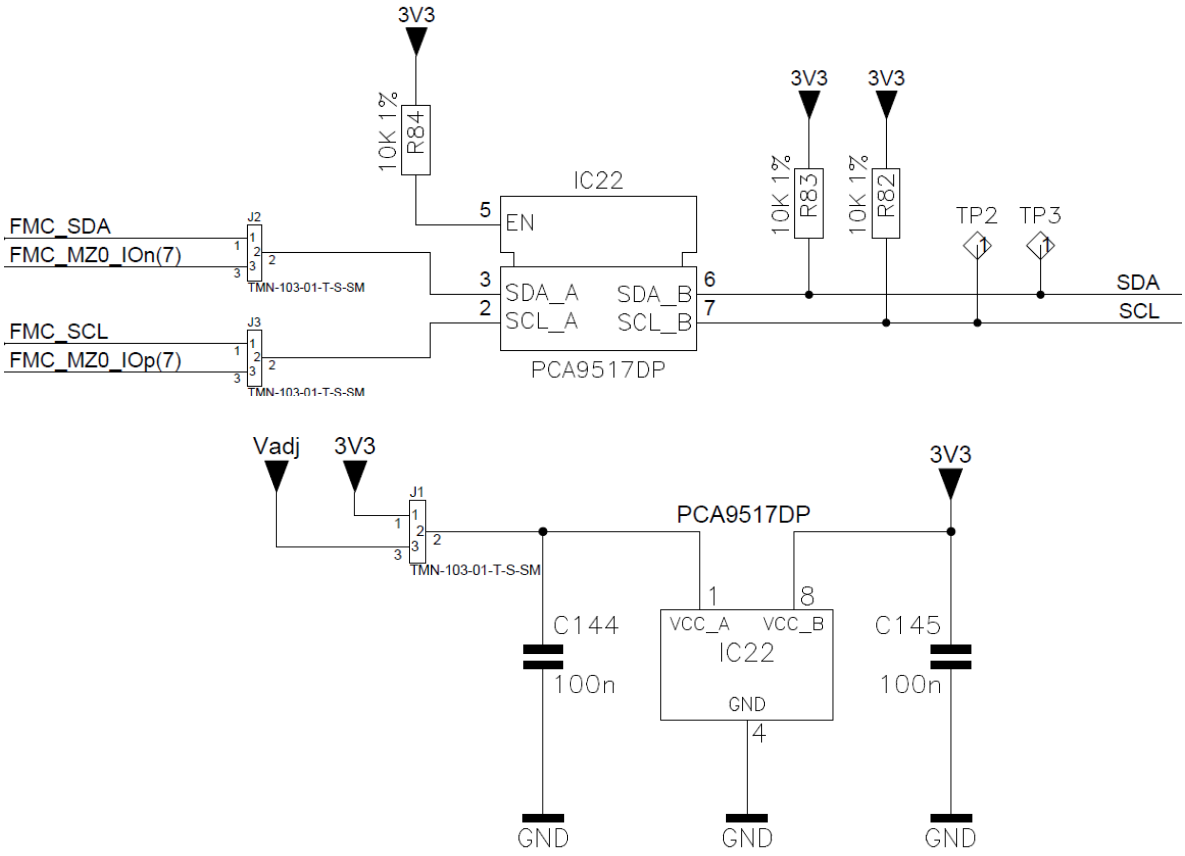

Figure 9-1 I2C jumpers

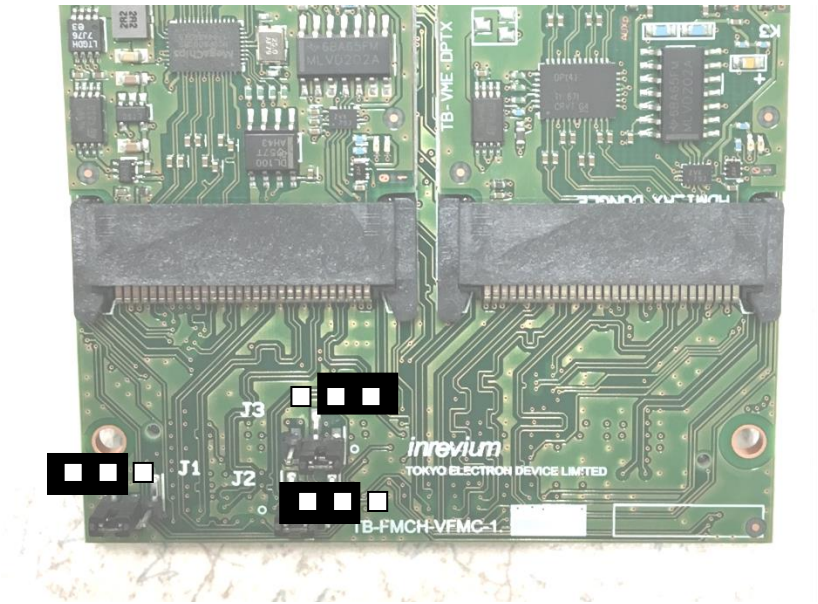

Figure 9-2 I2C pinout setting A

Table 9-1 I2C pinout (setting A)

I2C	Signal Name	FMC Pin name	FMC Pin No
SCL	FMC_SCL	SCL	C30
SDA	FMC_SDA	SDA	C31

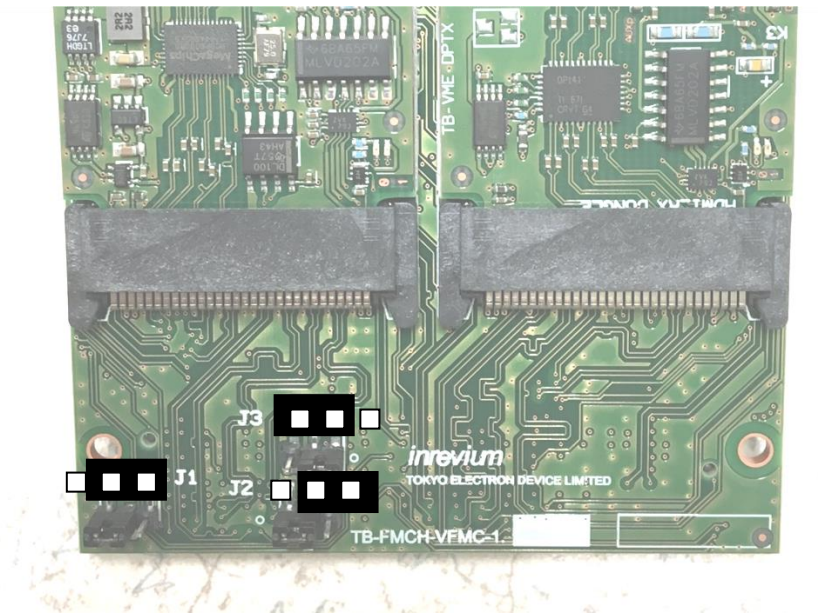

Figure 9-3 I2C pinout setting B

Table 9-2 I2C pinout (setting B)

I2C	Signal Name	FMC Pin name	FMC Pin No
SCL	FMC_MZ0_IOp(7)	LA32_P	H37
SDA	FMC_MZ0_IOn(7)	LA32_N	H38

9.2. I2C Slave addresses

Slave address for EEPROM on the Video FMC depends on the FMC GA pin level. If GA pins are set to GA0 =0, GA1=1 the EEPROM slave address will conflict with PLL. For more detailes please contact to Inrevium technical support.
Note: Please do not read registers of IO expander (IC21) on the Video FMC. Entire I2C bus will be hanged up due to errata of a PLL chip.

Table 9-3 I2C slave address

	Component	Part nunmber	Reference	Sleve address	FMC GA pin
Video FMC	EEPROM	M24C02-RDW6	IC6	0x50	GA0 =0, GA1=0
				0x51	GA0 =0, GA1=1
				0x52	GA0 =1, GA1=0
				0x53	GA0 =1, GA1=1
	IO expander	PCA9674BS	IC18	0x64	-
	IO expander	PCA9674BS	IC21	0x65	-
	PLL	Si5344D-D-GM	C13	0x68	-
	PLL	LMK03318RHST	IC12	0x51	-
	PLL	IDT8T49N241-999NLGI	IC11	0x7C	-
	Programmable Oscillator	LMK61E2-SIAT	IC8	0x59	-
DP Tx Dongle	EEPROM	M24C64-WDW6	IC1	0x57	-
	Redriver	SN65DP141RLJR	IC2	0x05	-
DP RX Dongle	EEPROM	M24C64-WDW6	IC1	0x56	-
	Retimer	MCDP6000B0	IC5	0x14	-

9.3. FMC I2C EEPROM

FMC I2C EEPROM(IC6) on the Video FMC has been programmed at the factory for Xilinx KCU105 and ZCU102. Please do not erase it.

TOKYO ELECTRON DEVICE

URL: http://solutions.inrevium.com/
http://solutions.inrevium.com/jp/
E-mail: psd-sales@teldevice.co.jp

HEAD Quarter: Yokohama East Square, 1-4 Kinko-cho, Kanagawa-ku, Yokohama City,
Kanagawa, Japan 221-0056
TEL: +81-45-443-4031 FAX: +81-45-443-4063